Transfer or duplication of this doucument as well as the utilisation or communication of its content are not permitted unless express consen is granted. Violations give rise to claims for damages. All rights reserved in case of patent, utility model or design patent registrations.

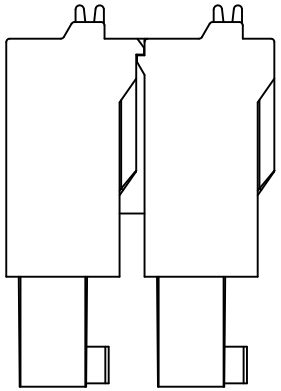

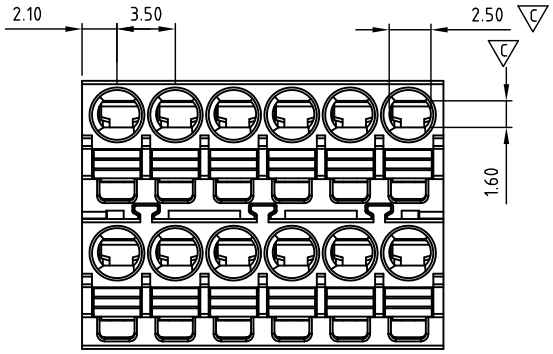

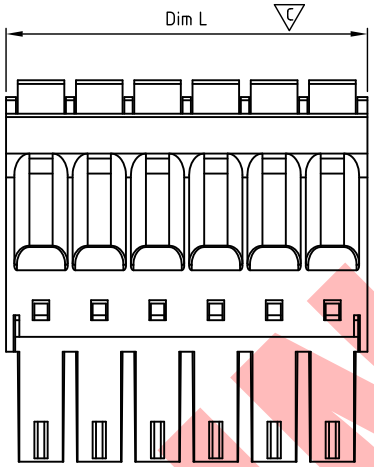

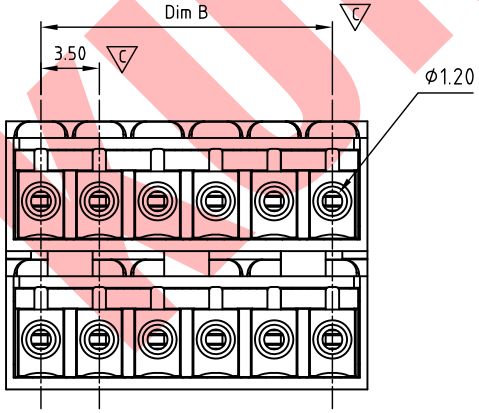

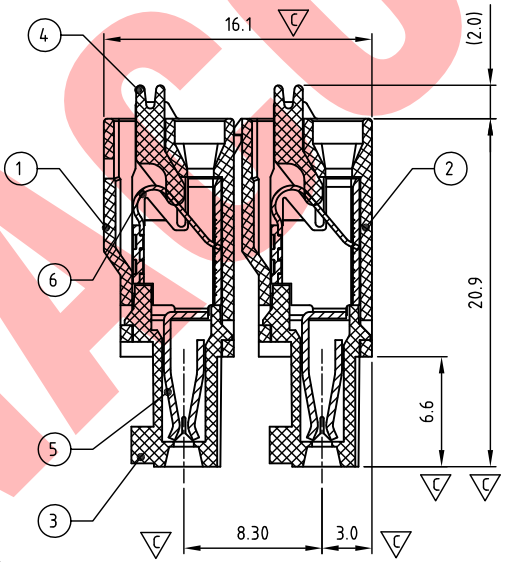

Technical data

1.Nominal voltage: 150V/8A
PITCH:3.5mm

2.Connection capacity:
AWG 24-16

3.Insulation Withstands Voltage:
AC 1300V/MIN

4.Insulation Resistace:
1000MΩor more at DC500V

5.Stripping length: 9-10mm

6Using temperature range:-40C °-115C °

7.Undimen sioned Tolerances:

Dim.L=(P-1)x3.5+4.2
Dim.B=(P-1)x3.5
P= 1/2number of poles(04-48)

	Dim B	Dim L
0-30mm	±0.15	±0.20
over 30mm-60mm	±0.20	±0.25
over 60mm-90mm	±0.25	±0.30
over 90mm	±0.30	±0.40

8.Safety approval:

9.RoHS Compliance

10.Critical dimension:

PBSD350 xx x Dxx
①②③

①Poles 2×02-2×24
②Color
0 Black 3 Orange 5 Green 6 Blue G Pale grey.....
③Custom
D00 K MARK D0K KUNACON MARK
D0N NO MARK.....

ITEM	NAME OF PART	MATERIAL	NOTES	Q"TY
6	WIRE GUARD	Stainless steel		P
5	CONTACT	BRONZE (PhBz)	TIN PLATED	P
4	LEVEL	PBT UL94V-0	ORANGE	P
3	COVER	PA66 UL94V-0	ALL COLOR	2
2	FEMAL BODY	PA66 UL94V-0	ALL COLOR	1
1	MALE BODY	PA66 UL94V-0	ALL COLOR	1

DWG.	WF. Zhang	DATE	2018.01.24	UNITS:	MM	SHEET:	1 OF 1
CHK.	WF. Zhang	DATE	2018.04.14	SCALE:	NONE 3:1 (:)	REV.: A	
APP.		DATE		TITLE:	PB-SD350 Series W/o flange type Double type		
				PART NO.	PBSD350xxxDxx		
				DWG NO.	PB-S350-B101		

Tolerance
X. ±0.50
X.X ±0.30
X.XX ±0.10
X° ±1°

KUNA Contact Technology Co, Ltd
http://www.kunacon.com

SIGN	DESCRIPTION	CHK.	DATE
1			

KUNACON